SUB FRAME FOR STANDING SEAM ROOF – SEAM CLIP SIDE FLANGES (3X)

IMPORTANT: CONFIRM 1" (DIM A) PROVIDES ADEQUATE CLEARANCE BETWEEN BOTTOM OF THE ROOF PANEL AND THE TOP OF THE PURLIN.

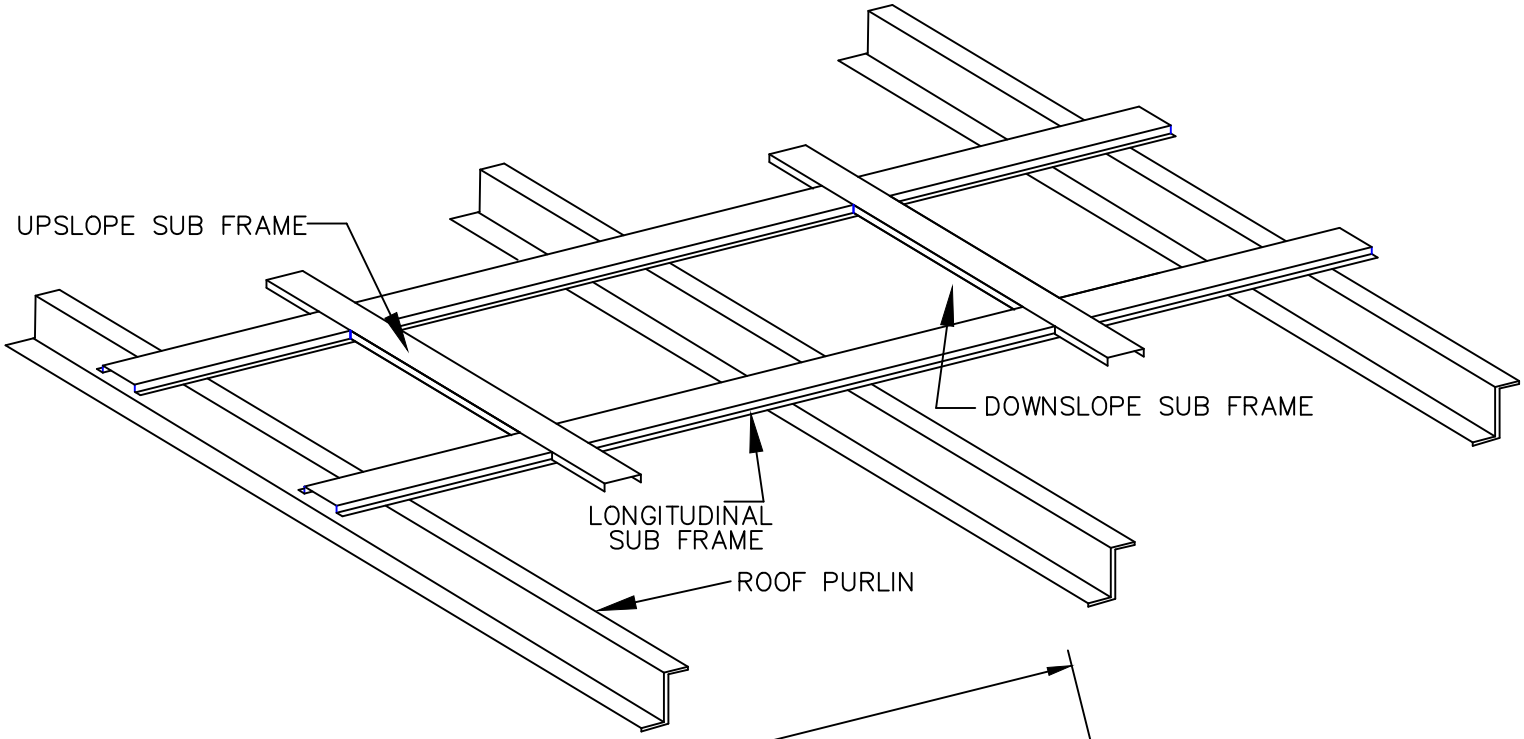

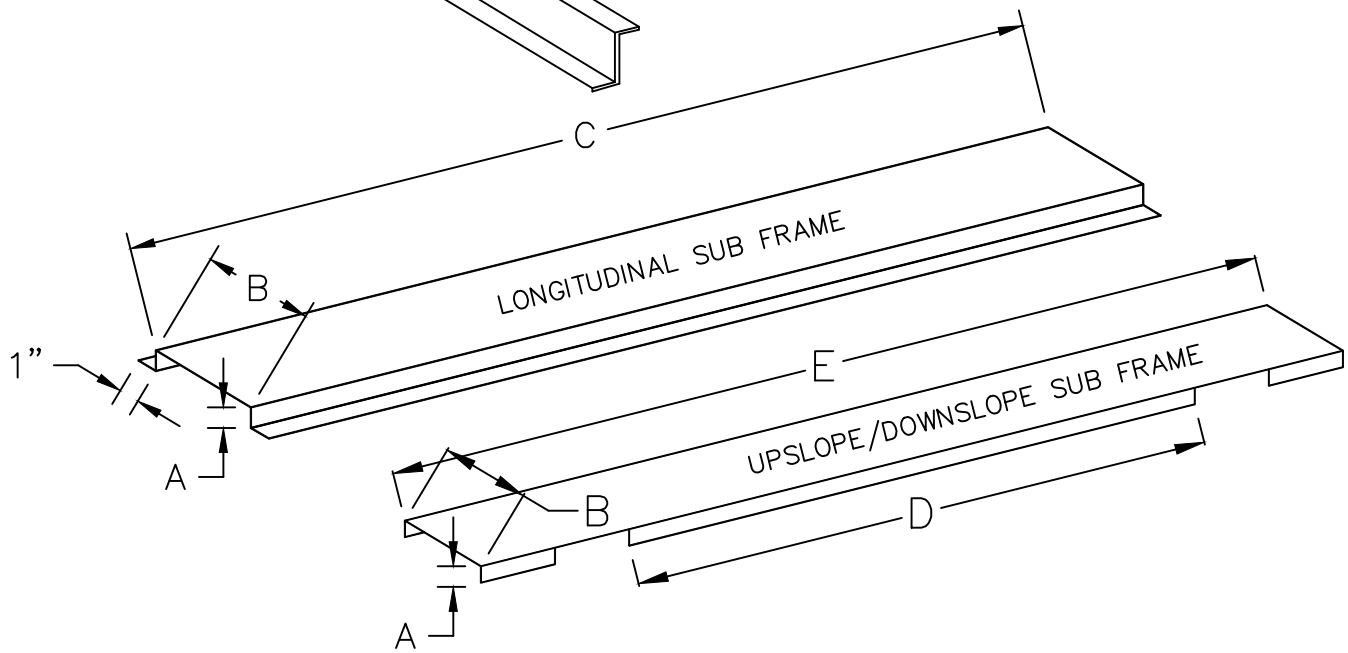

SCHEDULE

LONG S/F	A	B	C		QTY
Curb A					

UP/DN S/F	A	B	D	E	QTY
Curb A					

R&S MANUFACTURING AND SALES CO.
3575 OLD CONEJO ROAD
NEWBURY PARK, CA 91320
P: 805.375.3980 | F: 805.375.3981
WWW.RNSSALES.COM

PROJECT:

CONTRACTOR:

LOCATION:

DATE: